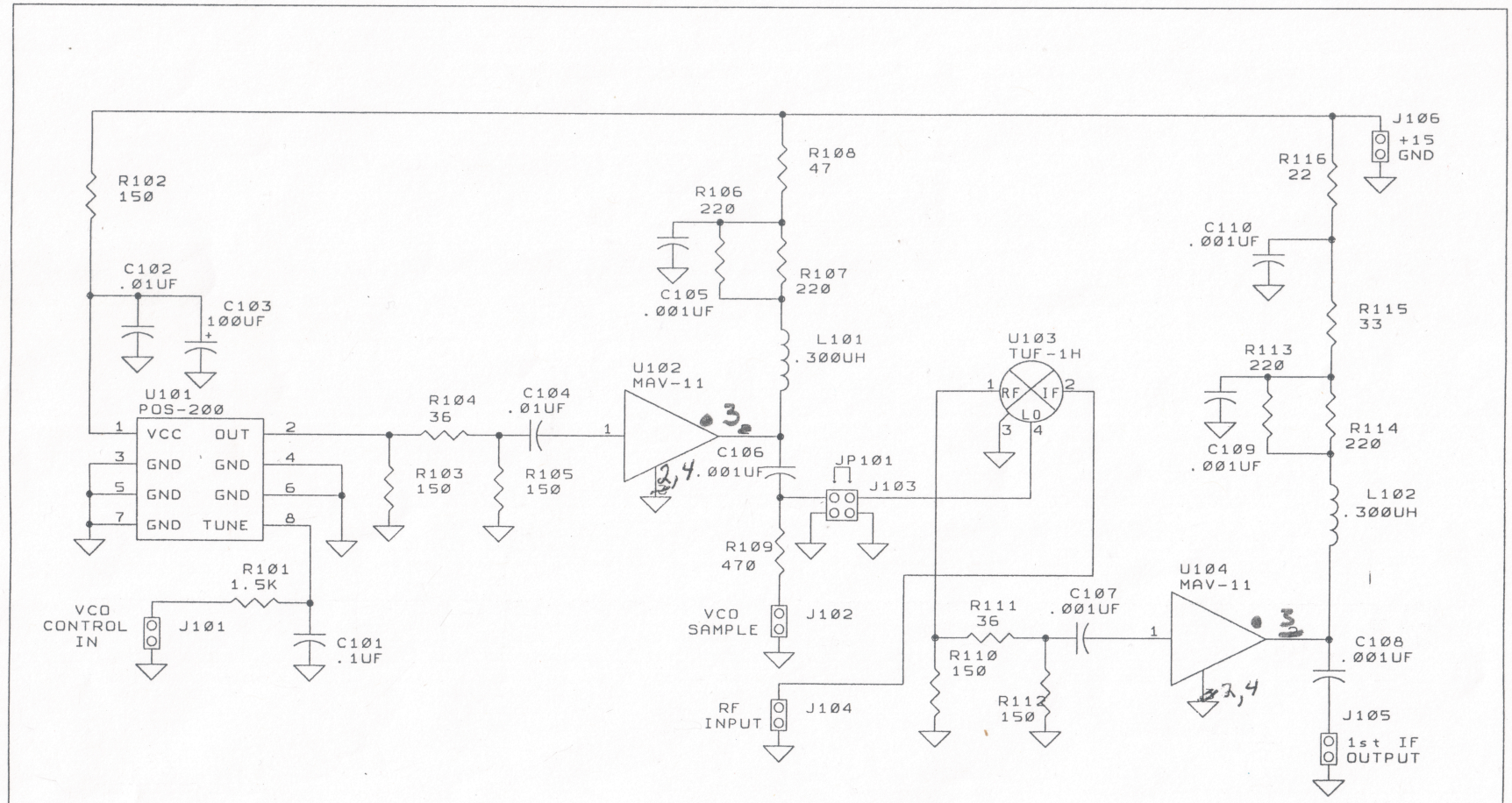

WES HAYWARD/TERRY A. WHITE

9480 SOUTH GRIBBLE ROAD
CANBY, OREGON 97013
503-263-8357

Title: 1st LO and 1st MIXER		
Size: A	Document Number: 1ST_1ST.SCH	REV: -
Date: March 12, 1998	Sheet 1 of 1	

Item	Quantity	Reference	Part
1	1 ✓	C101	.1UF,50VDC,Z5U,,
2	2 ✓	C102,C104	.01UF,50VDC,Z5U,,
3	1 ✓	C103	100UF,25VDC,RADIAL,,
4	6 ✓	C105,C106,C107,C108,C109, C110	.001UF,50VDC,Z5U,,
5	× 1	JP101	JUMPER,,,,
6	× 5	J101,J102,J104,J105,J106	HEADER 1X2,,,,
7	× 1	J103	HEADER 2X2,,,,
8	2 ✓	L101,L102	.300UH,T37-6,10-T,#30,
9	1 ✓	R101	1.5K,1/4W,5%,,
10	5 ✓	R102,R103,R105,R110,R112	150,1/4W,5%,,
11	2 ✓	R104,R111	36,1/4W,5%,,
12	4 ✓	R106,R107,R113,R114	220,1/4W,5%,,
13	1 ✓	R108	47,1/4W,5%,,
14	1 ✓	R109	470,1/4W,5%,,
15	1 ✓	R115	33,1/4W,5%,,
16	1 ✓	R116	22,1/4W,5%,,
17	1 ✓	U101	POS-200,VCO,,,
18	2 ✓	U102,U104	MAV-11,AMPLIFIER,,,
19	1 ✓	U103	TUF-1H,MIXER,,,

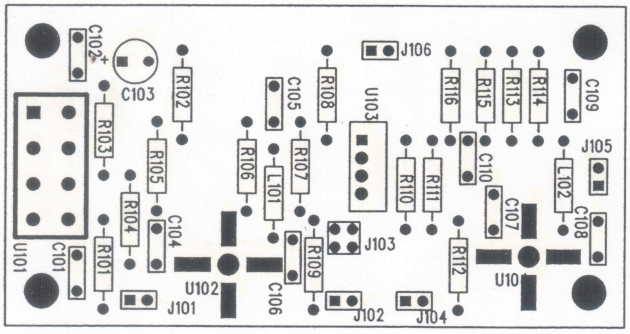

1st_sml10.pcb - Tue Jul 14 05:59:12 1998

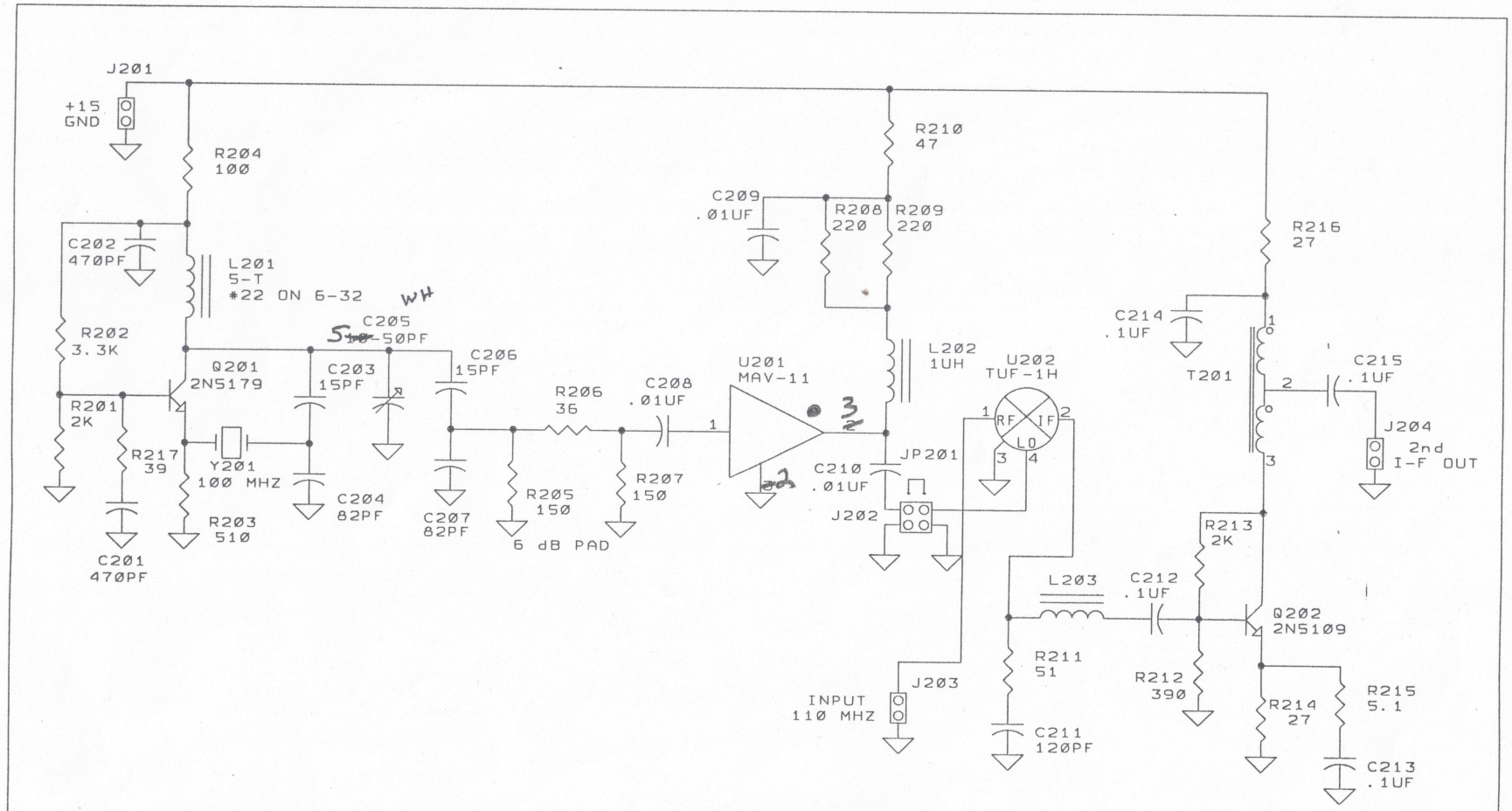

WES HAYWARD/TERRY A. WHITE

9480 SOUTH GRIBBLE ROAD
CANBY, OREGON 97013
503-263-8357

Title: 2nd LO and 2nd MIXER		
Size: A	Document Number: 2ND_2ND.SCH	REV: A
Date: June 22, 1998	Sheet 1 of 1	

2nd LO and 2nd MIXER — Revised: June 22, 1998
2ND_2ND.SCH — Revision: A
Bill Of Materials — July 29, 1998 21:11:19 — Page 1

Item	Quantity	Reference	Part
1	2	C201,C202	470PF,50VDC,Z5U,,
2	2	C203,C206	15PF,50VDC,NPO,,
3	2	C204,C207	82PF,50VDC,NPO,,
4	1	C205	5-50PF,TRIMMER,PCB MT,,
5	3	C208,C209,C210	.01UF,50VDC,Z5U,,
6	1	C211	120PF,50VDC,NPO,,
7	4	C212,C213,C214,C215	.1UF,50VDC,Z5U,,
8	* 1	JP201	JUMPER,,,,
9	* 3	J201,J203,J204	HEADER 1X2,,,,
10	* 1	J202	HEADER 2X2,,,,
11	1	L201	5-T,#22 ON 6-32,,, — diameter
12	1	L202	1UH,,,, 10T #30 T37-6
13	1	L203	10-T,T37-6,,,
14	1	Q201	2N5179,,,,
15	1	Q202	2N5109,,,,
16	2	R201,R213	2K,1/4W,5%,,
17	1	R202	3.3K,1/4W,5%,,
18	1	R203	510,1/4W,5%,,
19	1	R204	100,1/4W,5%,,
20	2	R205,R207	150,1/4W,5%,,
21	1	R206	36,1/4W,5%,,
22	2	R208,R209	220,1/4W,5%,,
23	1	R210	47,1/4W,5%,,
24	1	R211	51,1/4W,5%,,
25	1	R212	390,1/4W,5%,,
26	2	R214,R216	27,1/4W,5%,,
27	1	R215	5.1,1/4W,5%,,
28	1	R217	39,,,,
29	1	T201	BIFILAR,,,, 10T #28 FT37-43
30	1	U201	MAV-11,AMPLIFIER,,,
31	1	U202	TUF-1H,MIXER,,,
32	1	Y201	100 MHZ,5th OVERTONE,HC-18/U,,

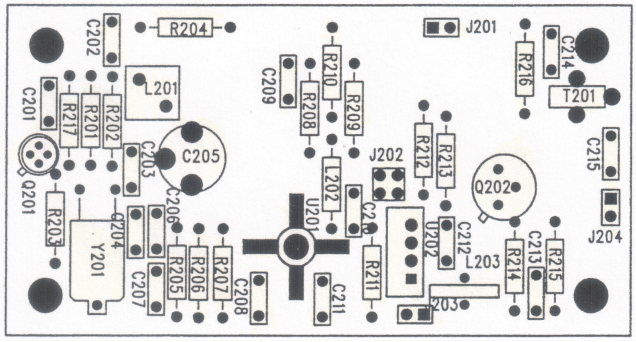

2nd_sml08.pcb - Wed Jul 29 07:21:55 1998

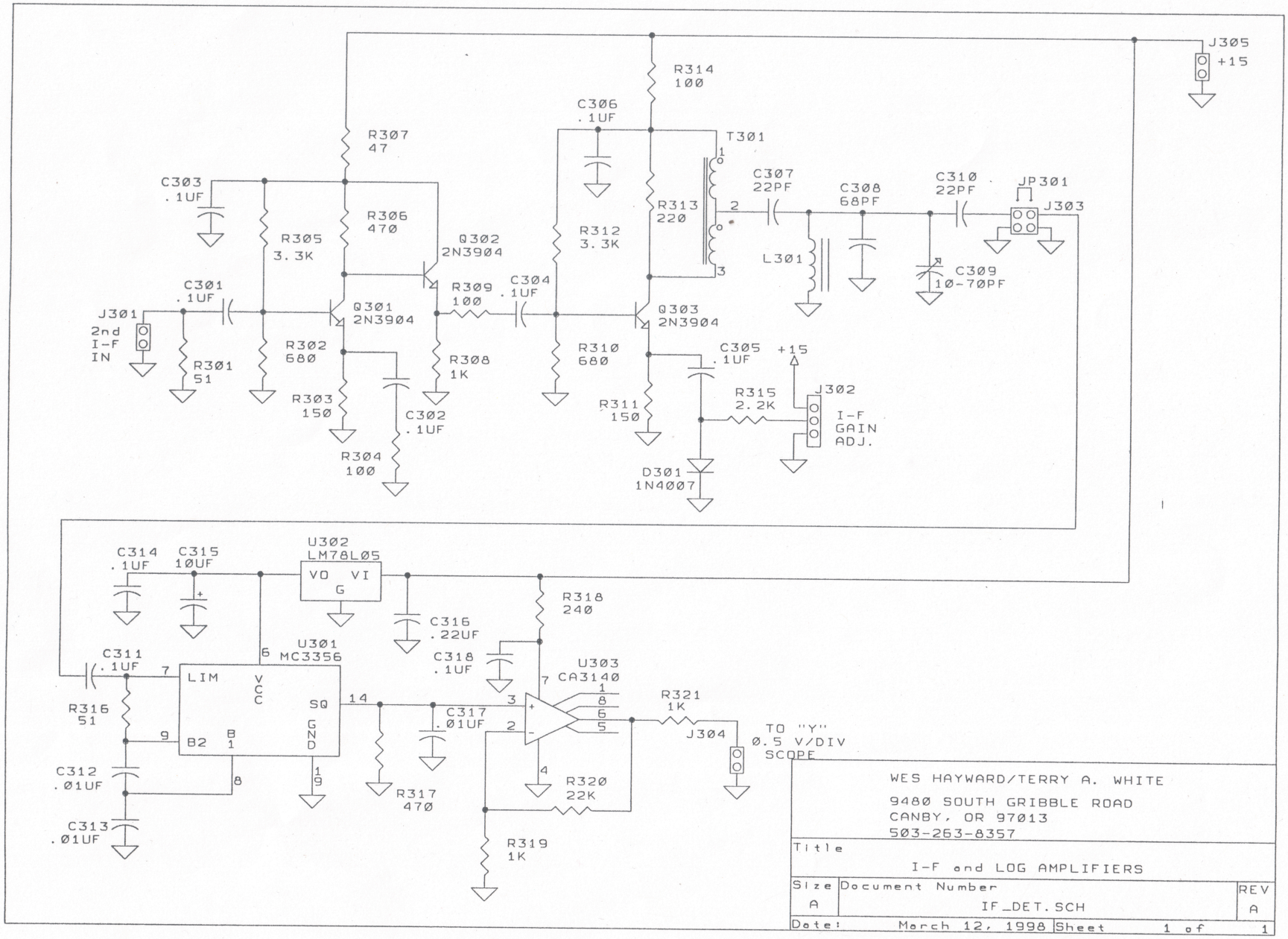

WES HAYWARD/TERRY A. WHITE

9480 SOUTH GRIBBLE ROAD
CANBY, OR 97013
503-263-8357

Title		
I-F and LOG AMPLIFIERS		
Size: A	Document Number: IF_DET.SCH	REV: A
Date: March 12, 1998	Sheet 1 of 1	

Item	Quantity	Reference	Part
1	9 ✓	C301,C302,C303,C304,C305, C306,C311,C314,C318	.1UF,50VDC,Z5U,,
2	2 ✓	C307,C310	22PF,50VDC,NPO,,
3	1 ✓	C308	68PF,50VDC,NPO,,
4	1 ✓	C309	10-70PF,TRIMMER,,,
5	3 ✓	C312,C313,C317	.01UF,50VDC,Z5U,,
6	1 ✓	C315	10UF,25VDC,RADIAL,,
7	1 ✓	C316	.22UF,100VDC,POLY,,
8	1 ✓	D301	1N4007,,,,
9	* 1	JP301	JUMPER,,,,
10	* 3	J301,J304,J305	HEADER 1X2,,,,
11	* 1	J302	HEADER 1X3,,,,
12	* 1	J303	HEADER 2X2,,,,
13	1 ✓	L301	1.35UH,T44-6,18-T #24,,
14	3 ✓	Q301,Q302,Q303	2N3904,,,,
15	2 ✓	R301,R316	51,1/4W,5%,,
16	2 ✓	R302,R310	680,1/4W,5%,,
17	2 ✓	R303,R311	150,1/4W,5%,,
18	3 ✓	R304,R309,R314	100,1/4W,5%,,
19	2 ✓	R305,R312	3.3K,1/4W,5%,,
20	2 ✓	R306,R317	470,1/4W,5%,,
21	1 ✓	R307	47,1/4W,5%,,
22	3 ✓	R308,R319,R321	1K,1/4W,5%,,
23	1 ✓	R313	220,1/4W,5%,,
24	1 ✓	R315	2.2K,1/4W,5%,,
25	1 ✓	R318	240,1/4W,5%,,
26	1 ✓	R320	22K,1/4W,5%,,
27	1 ✓	T301	BIFILAR,,,, 10 T on FT37-43
28	1 ✓	U301	MC3356,,,,
29	1 ✓	U302	LM78L05,,,,
30	1 ✓	U303	CA3140,,,,

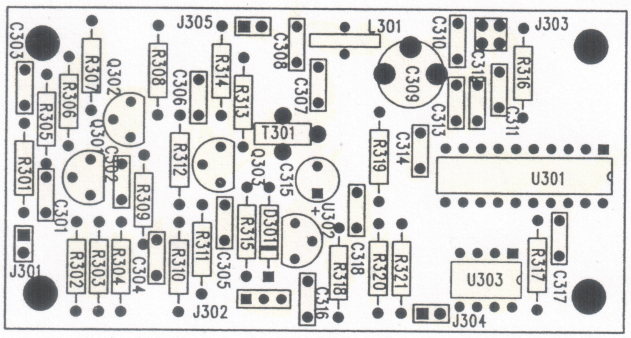

Log_sml06.pcb – Tue Jul 14 06:05:32 1998

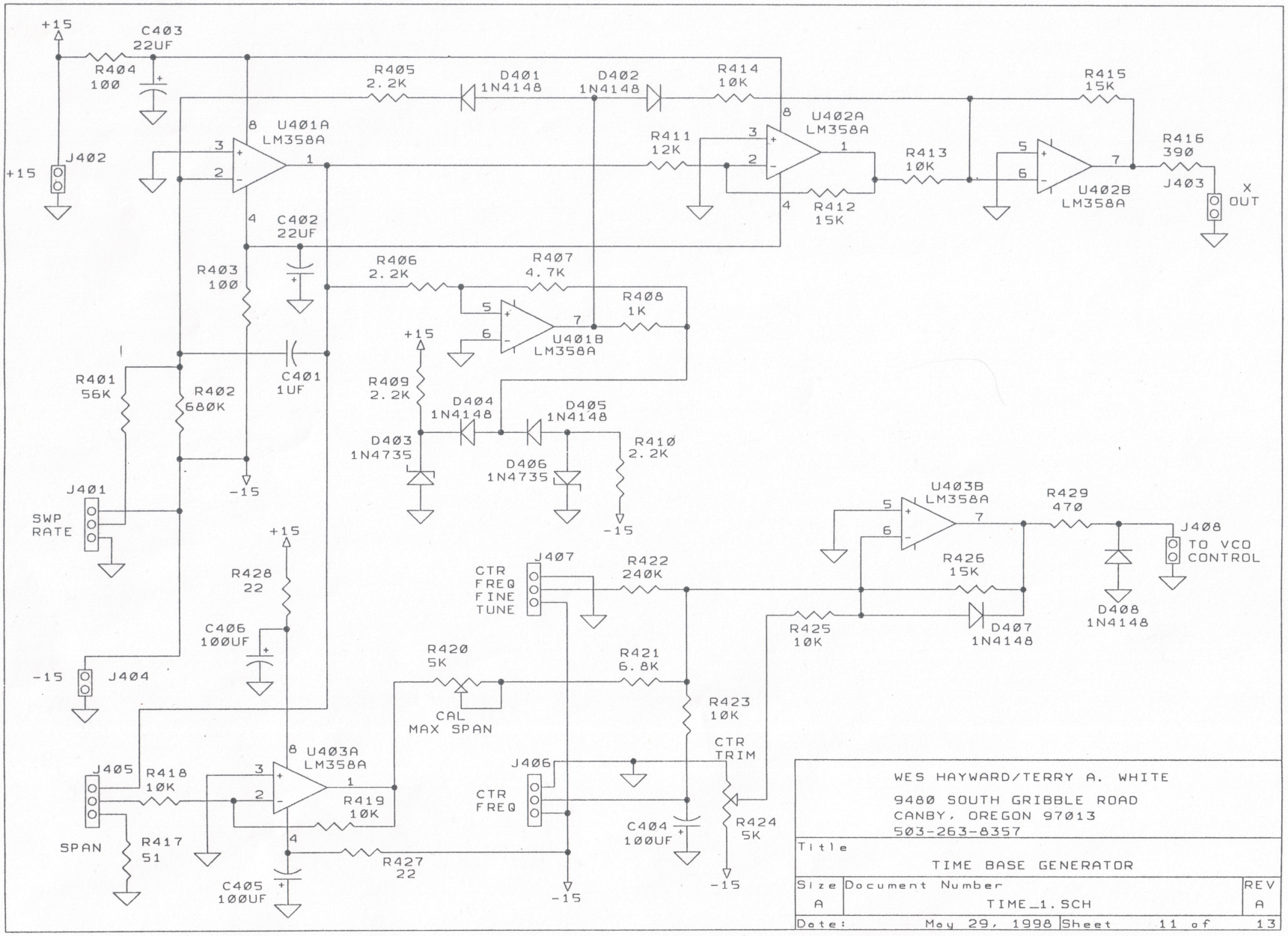
+15
C403
22UF
R404
100
R405
2.2K
D401
1N4148
D402
1N4148
R414
10K
R415
15K
U401A
LM358A
U402A
LM358A
R411
12K
R413
10K
U402B
LM358A
R416
390
J403
X
OUT
J402
C402
22UF
R412
15K
R403
100
R406
2.2K
R407
4.7K
R408
1K
U401B
LM358A
C401
1UF
R401
56K
R402
680K
R409
2.2K
D404
1N4148
D405
1N4148
D403
1N4735
D406
1N4735
R410
2.2K
-15
J401
SWP
RATE
U403B
LM358A
R429
470
J408
TO VCO
CONTROL
R426
15K
D408
1N4148
J407
CTR
FREQ
FINE
TUNE
R422
240K
R425
10K
D407
1N4148
R428
22
C406
100UF
J404
R420
5K
R421
6.8K
R423
10K
CAL
MAX SPAN
CTR
TRIM
U403A
LM358A
J405
R418
10K
J406
CTR
FREQ
R419
10K
C404
100UF
R424
5K
SPAN
R417
51
R427
22
C405
100UF
WES HAYWARD/TERRY A. WHITE
9480 SOUTH GRIBBLE ROAD
CANBY, OREGON 97013
503-263-8357
Title
TIME BASE GENERATOR
Size
A
Document Number
TIME_1.SCH
REV
A
Date:
May 29, 1998
Sheet
11 of
13

TIME BASE GENERATOR
TIME_1.SCH
Bill Of Materials

Revised: May 29, 1998
Revision: A

July 29, 1998 21:09:40

Item	Quantity	Reference	Part
1	1	C401	1UF,100VDC,POLY,,
2	2	C402,C403	22UF,25VDC,RADIAL,,
3	3	C404,C405,C406	100UF,25VDC,RADIAL,,
4	6	D401,D402,D404,D405,D407, D408	1N4148,,,,
5	2	D403,D406	1N4735,6.2V;ZENER,1W,
6	4	J401,J405,J406,J407	HEADER 1X3,,,,
7	4	J402,J403,J404,J408	HEADER 1X2,,,,
8	1	R401	56K,1/4W,5%,,
9	1	R402	680K,1/4W,5%,,
10	2	R403,R404	100,1/4W,5%,,
11	4	R405,R406,R409,R410	2.2K,1/4W,5%,,
12	1	R407	4.7K,1/4W,5%,,
13	1	R408	1K,1/4W,5%,,
14	1	R411	12K,1/4W,5%,,
15	3	R412,R415,R426	15K,1/4W,5%,,
16	6	R413,R414,R418,R419,R423, R425	10K,1/4W,5%,,
17	1	R416	390,1/4W,5%,,
18	1	R417	51,1/4W,5%,,
19	2	R424,R420	5K,POT,LIN.,,
20	1	R421	6.8K,1/4W,5%,,
21	1	R422	240K,1/4W,5%,,
22	2	R428,R427	22,1/4W,5%,,
23	1	R429	470,1/4W,5%,,
24	3	U401,U402,U403	LM358A,,,,

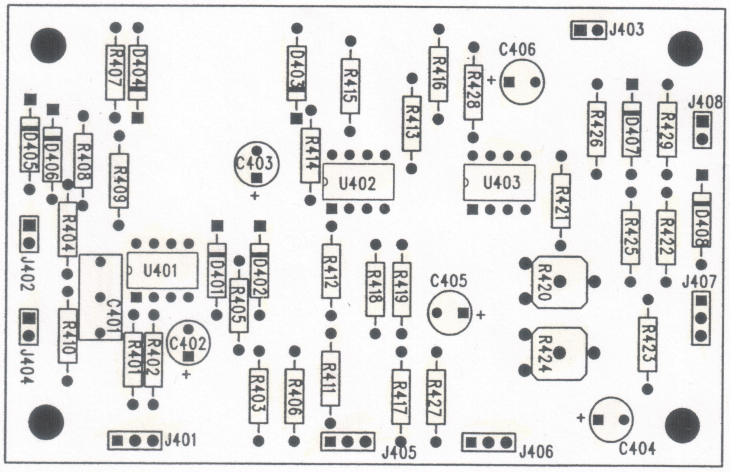

TM_base07.pcb – Fri Jul 24 10:25:37 1998

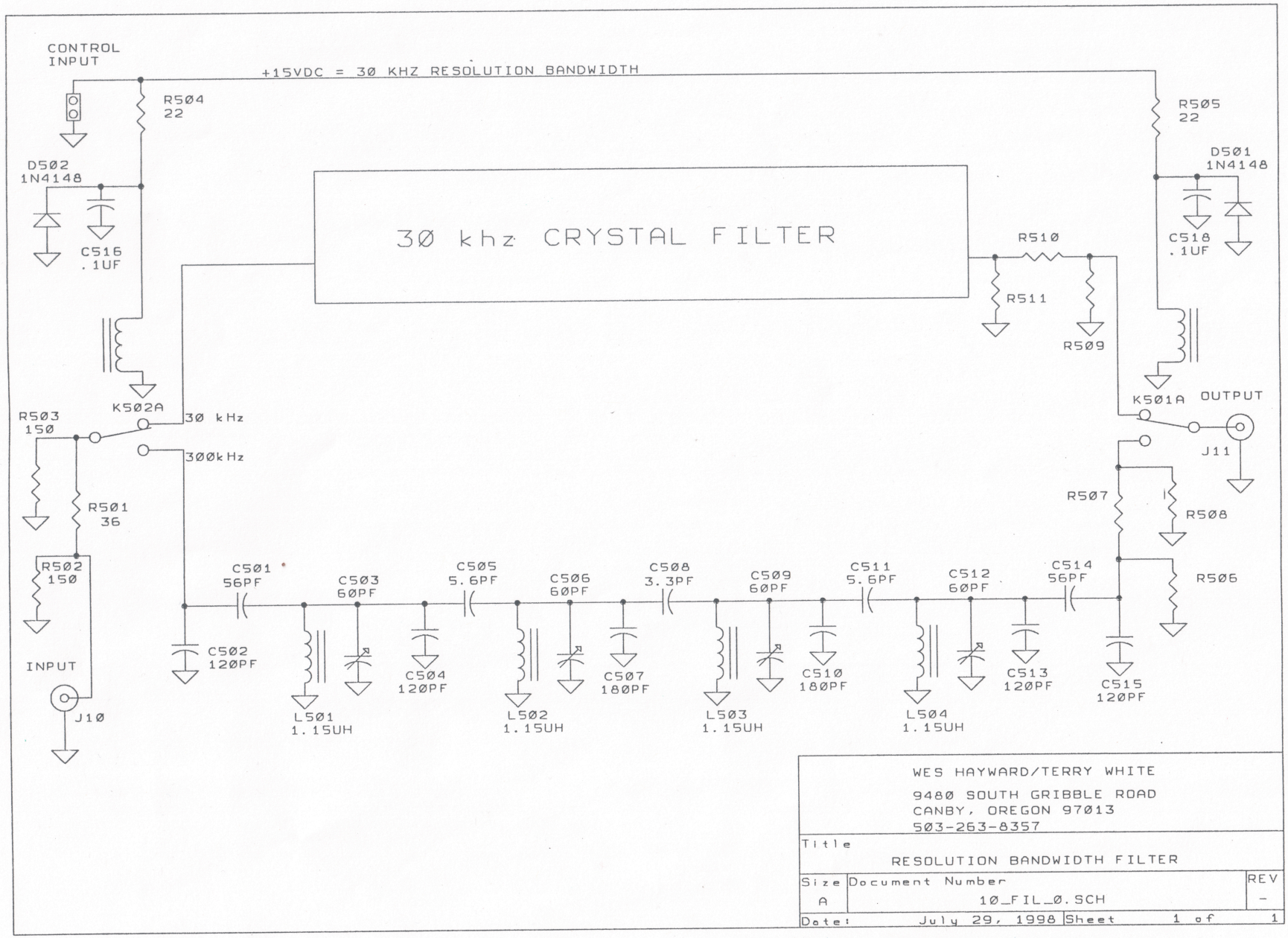
CONTROL INPUT
+15VDC = 30 KHZ RESOLUTION BANDWIDTH
R504 22
R505 22
D502 1N4148
D501 1N4148
C516 .1UF
C518 .1UF
30 khz CRYSTAL FILTER
R510
R511
R509
K502A
K501A
OUTPUT
30 kHz
300kHz
R503 150
R501 36
R502 150
J11
R507
R508
R506
INPUT
J10
C501 56PF
C502 120PF
C503 60PF
C504 120PF
C505 5.6PF
C506 60PF
C507 180PF
C508 3.3PF
C509 60PF
C510 180PF
C511 5.6PF
C512 60PF
C513 120PF
C514 56PF
C515 120PF
L501 1.15UH
L502 1.15UH
L503 1.15UH
L504 1.15UH
WES HAYWARD/TERRY WHITE
9480 SOUTH GRIBBLE ROAD
CANBY, OREGON 97013
503-263-8357
Title
RESOLUTION BANDWIDTH FILTER
Size A
Document Number 10_FIL_0.SCH
REV -
Date: July 29, 1998
Sheet 1 of 1

RESOLUTION BANDWIDTH FILTER Revised: July 29, 1998
10_FIL_0.SCH Revision: -
Bill Of Materials July 29, 1998 21:10:50 Page 1

Item	Quantity	Reference	Part
1	2	C501,C514	56PF,50VDC,NPO,,
2	3	C502,C504,C515	120PF,50VDC,NPO,,
3	4	C503,C506,C509,C512	60PF,,,,
4	2	C505,C511	5.6PF,50VDC,NPO,,
5	2	C510,C507	180PF,50VDC,NPO,,
6	1	C508	3.3PF,50VDC,NPO,,
7	1	C513	120PF,,,,
8	2	C516,C518	.1UF,,,,
9	2	D502,D501	1N4148,,,,
10	1	J?	HEADER 1X2,,,,
11	2	J10,J11	BNC,,,,
12	4	RY1,RY2,K501,K502	RELAY DPDT RF,,,,
13	4	L501,L502,L503,L504	1.15UH,,,,
14	1	R501	36,,,,
15	2	R502,R503	150,,,,
16	2	R504,R505	22,,,,
17	6	R506,R507,R508,R509,R510, R511	R,,,,

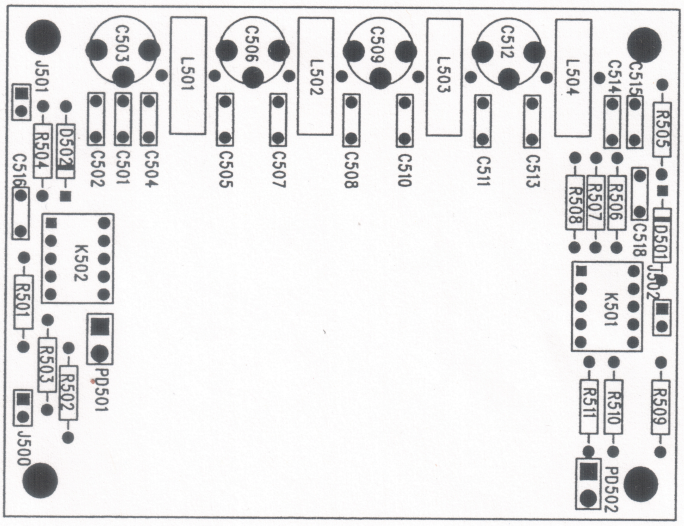
R505
D501
J502
R509
C515
C518
C514
R506
R507
R508
K501
R510
R511
PD502
L504
C512
C513
L503
C511
C509
C510
L502
C508
C506
C507
L501
C505
C503
C504
C501
C502
J501
D502
R504
C516
K502
PD501
R502
R503
R501
J500